L Bracket for Magnetic Lock With Water-Proof

Specification

Model	Size(unit:mm)	Suitable For	Used With	Weight
BL600W	250Lx47Wx28.5H	Narrow door	MAG600W	0.2kg
BL1200W	265Lx72.5Wx45.5H	Narrow door	MAG1200W	0.48kg

BL600W

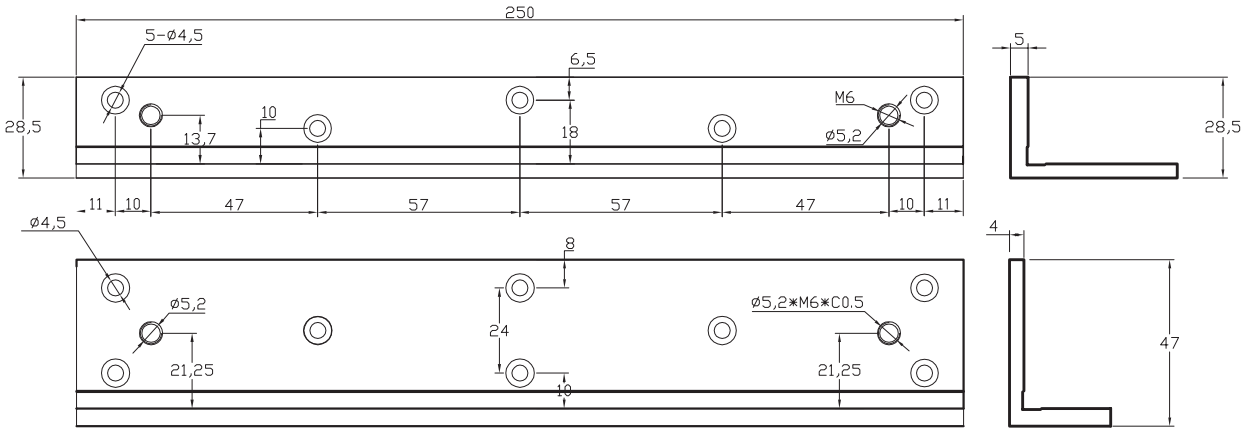

BL1200W

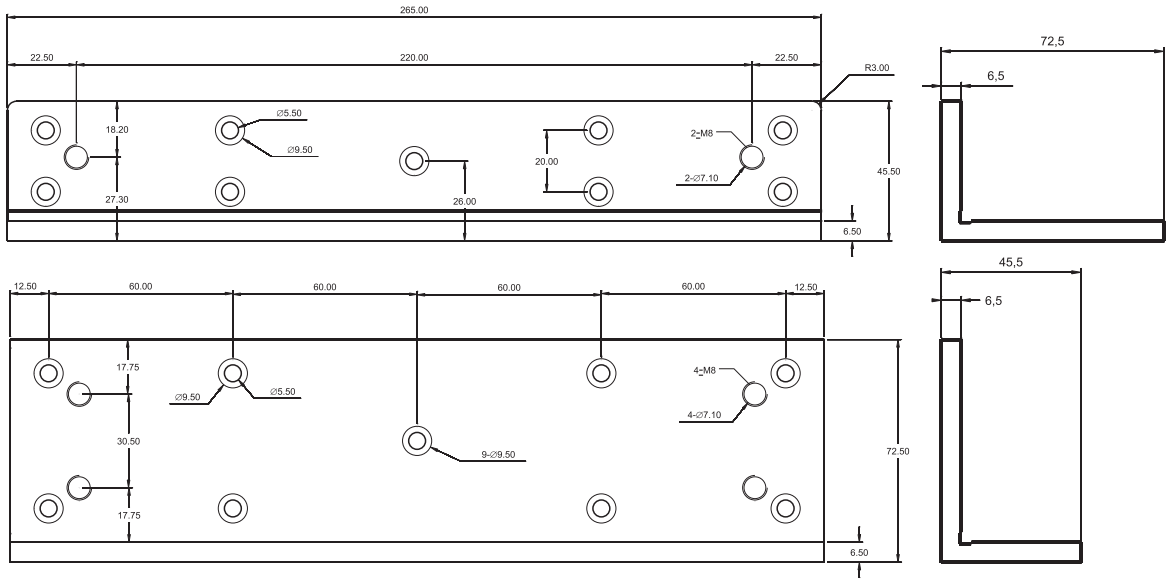

Installation

A. In case of the width of the door frame less than 42mm and there is not enough space ,L bracket is needed to be installed for the armature plate.

B. Fix the L bracket on the door frame.

C. Use the Allen key to fix the lock body the on the Z bracket.

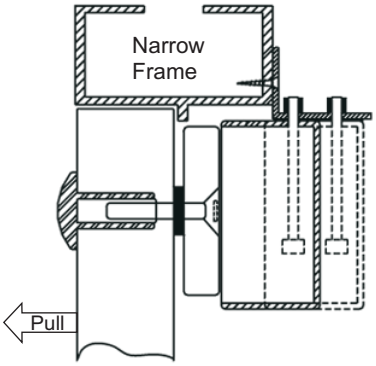

Narrow door frame(swing out)

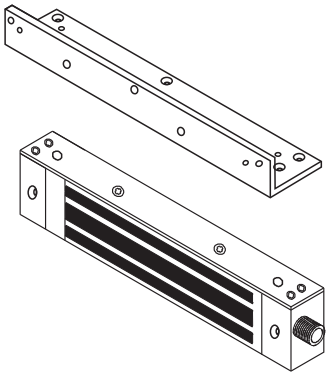

L Bracket(BL600W) Installation