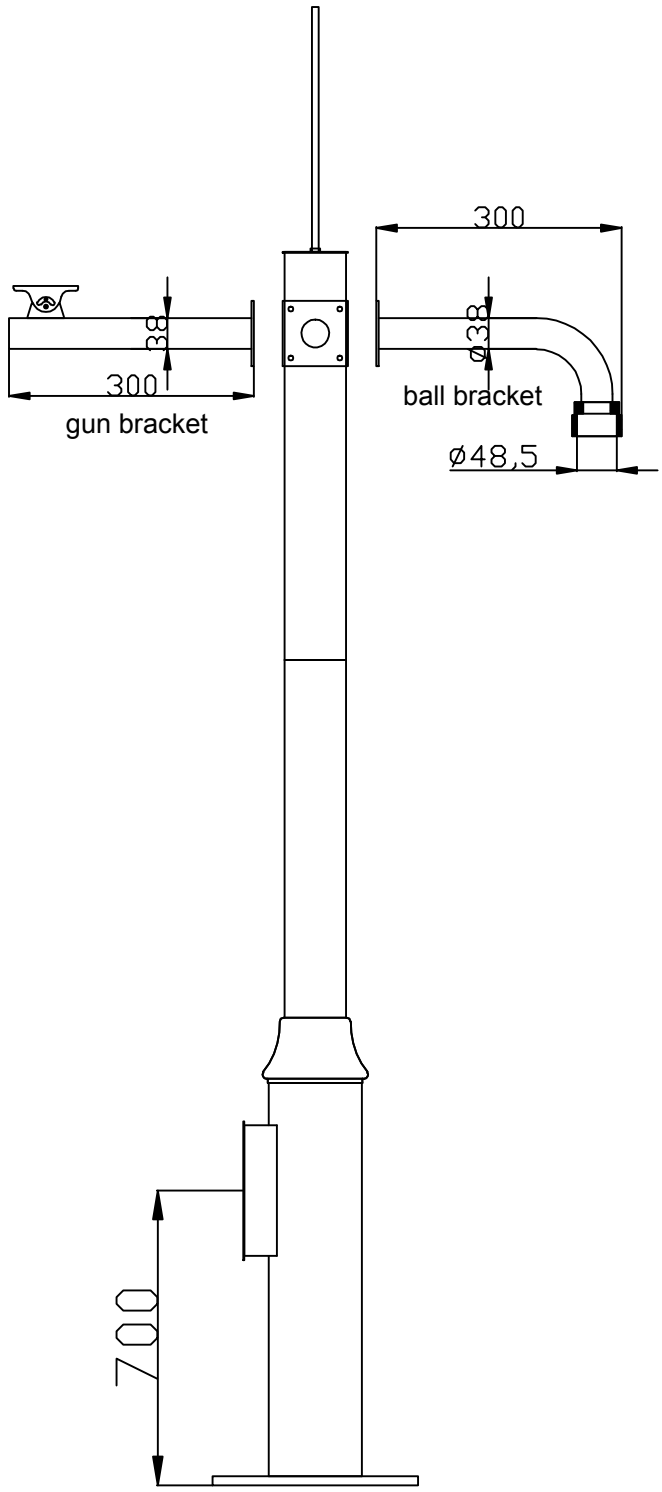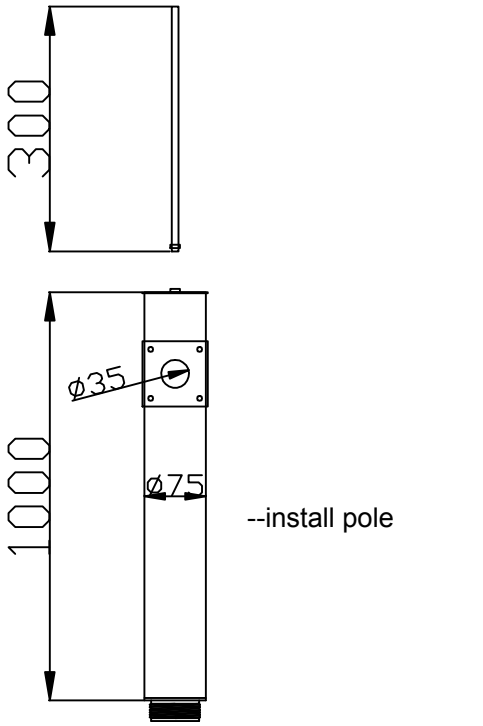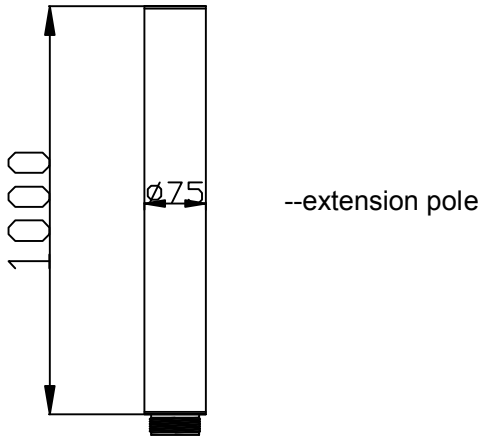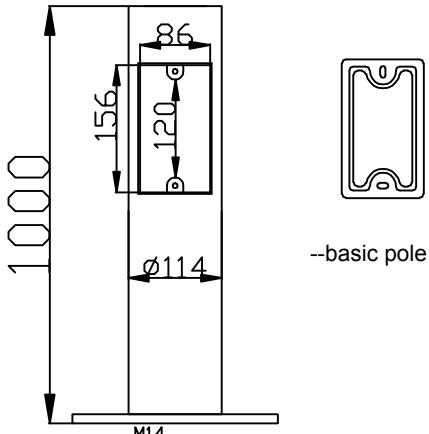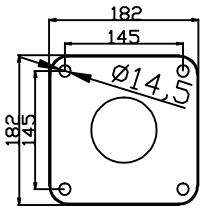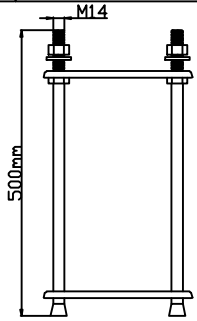3m-pole installation instruction