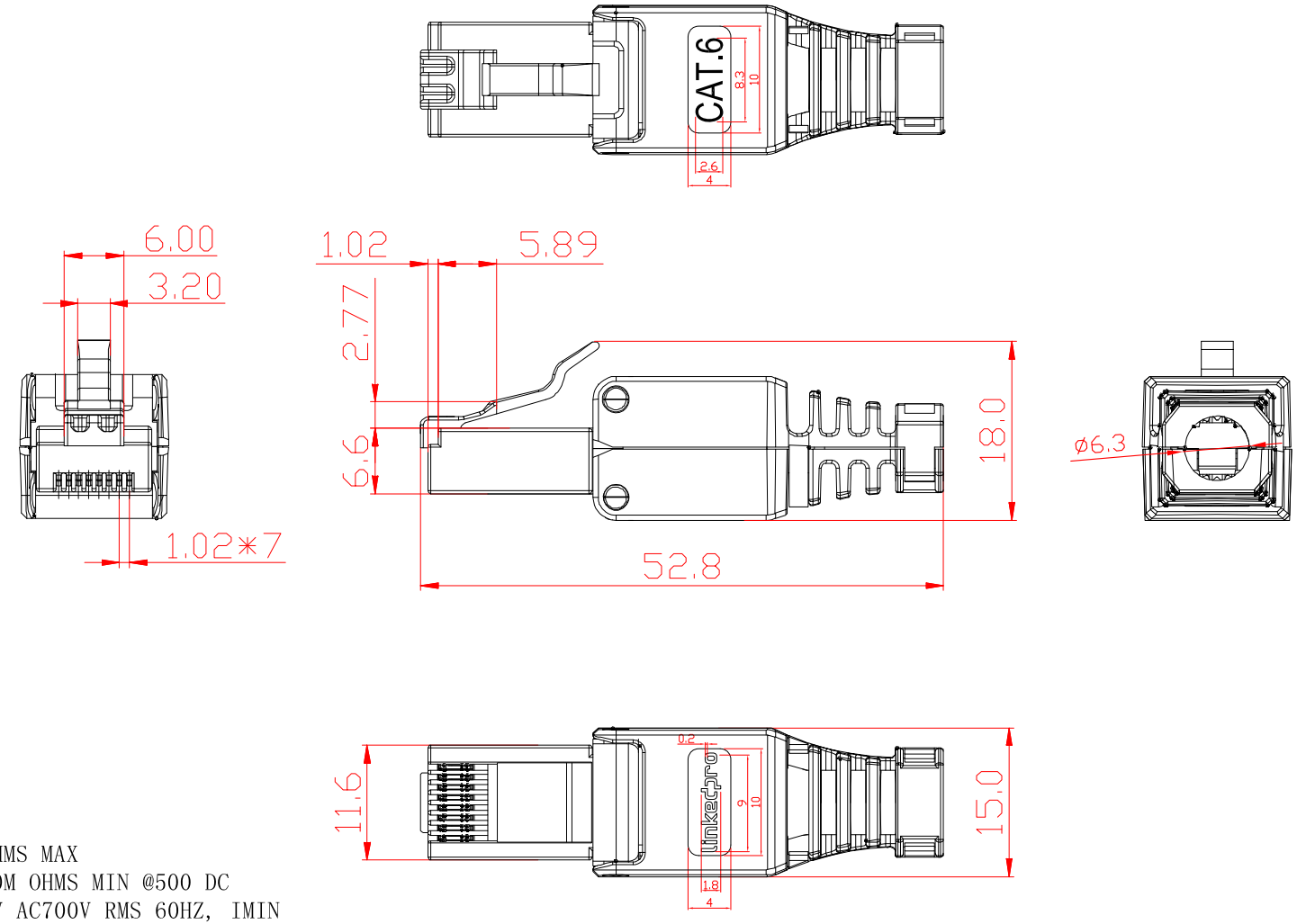

ELECTRICAL:

1. CONTACT RESISTANCE:20M OHMS MAX
2. INSULATION RESISTANCE:250M OHMS MIN @500 DC
3. WITHSTAND VOLTAGE:DC1000V AC700V RMS 60HZ, IMIN
4. CAT6 PERMANENT LINK:CONFORM TO ANST/TIA/EIA 568B.2-10

ENVIRONMENTAL:

5. STORAGE:-40° / +70°
6. OPERATION:-10° / 60°

MECHANICAL:

7. PLASTIC MATERIAL: PC
8. IDC MATERIAL:PC
9. IDC LIFE:750 TIMES MIN

TYPE:

10. USNHIELDED CAT6 TOOLLESS PLUG
11. COLOUR:WHETE

SYM	Number	Bill No. of Alteration	Signature	Date

Drawn			
Checked			
Approved			

Tolerance

0.00-20.00	±0.10
20.00-50.00	±0.15
50.00-100.00	±0.20
100.00-	±0.25
Angle	±30'

Material				Item No.	
Angles Projection	Size	Scale	Unit	DWG No.	
	A4	X:1	mm	Part Name	
Sheet	1 OF 1	Version: A/0		ERP Part No.	